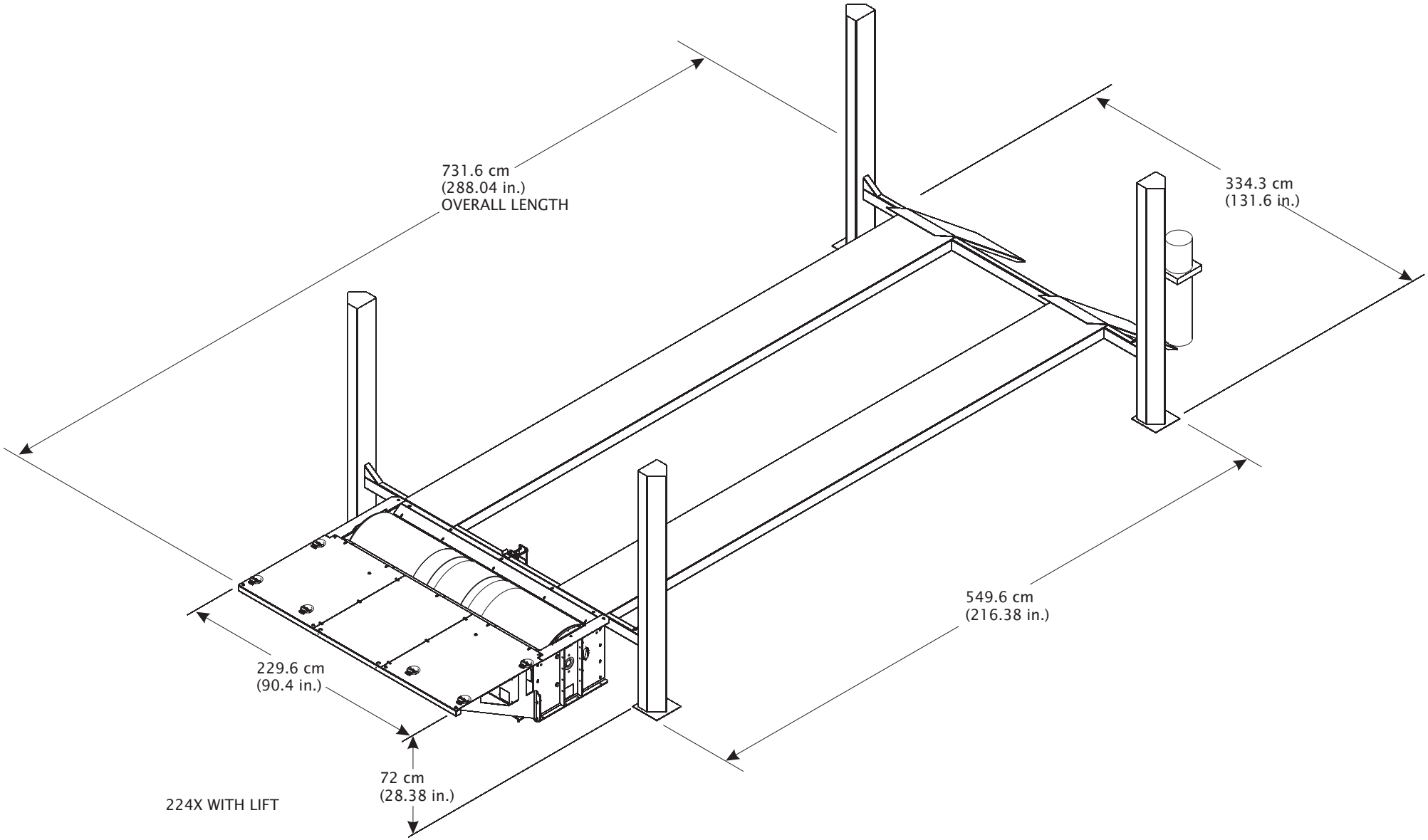

224X WITH LIFT